Antenna Modeling

Lee Johnson
N4WYE

TechFest
Jan 13, 2024

Thanks for the Invitation

KH6DAK in Hawaii 1957

Founding Member - Raleigh Amateur Radio Society 1969

W4DW Repeater 146.64 MHz in Raleigh 1975

Retired after 40 years in high tech systems

HF, VHF, SDR, home brew & antennas

NFARL member

N4WYE Lee

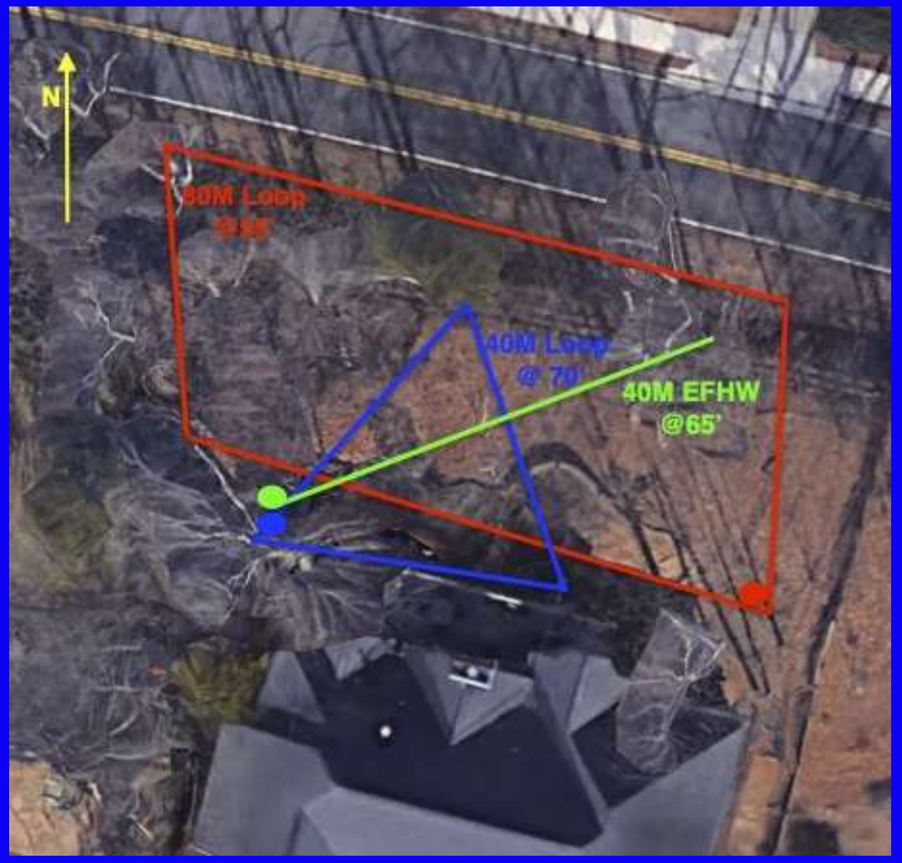

Antenna Modeling

- What is Antenna Modeling and why use it?
- Antenna Modeling software background
- MMANA-GAL model examples
- What the MMANA-GAL program can do
- Antenna modeling video demonstration
- How to get MMANA-GAL software
- YouTube introduction videos MMANA-GAL
- Q & A

Antennas Are Now Modeled

US Navy antenna test range, San Diego, California

- Antenna modeling used to be the domain of scientists and engineers with very expensive antenna ranges covering acres and acres of land strewn with expensive equipment.
- Originally developed at Lawrence Livermore National Laboratory (LLNL) in the 1970s, the program *Numerical Electromagnetics Code* or *NEC.*
- The antenna design phase has been greatly improved and shortened with software tools now available.
- With the proliferation of personal computers and affordable (even free) software, antenna modeling has become a popular amateur activity.

The Universe of Antenna Modeling Methods

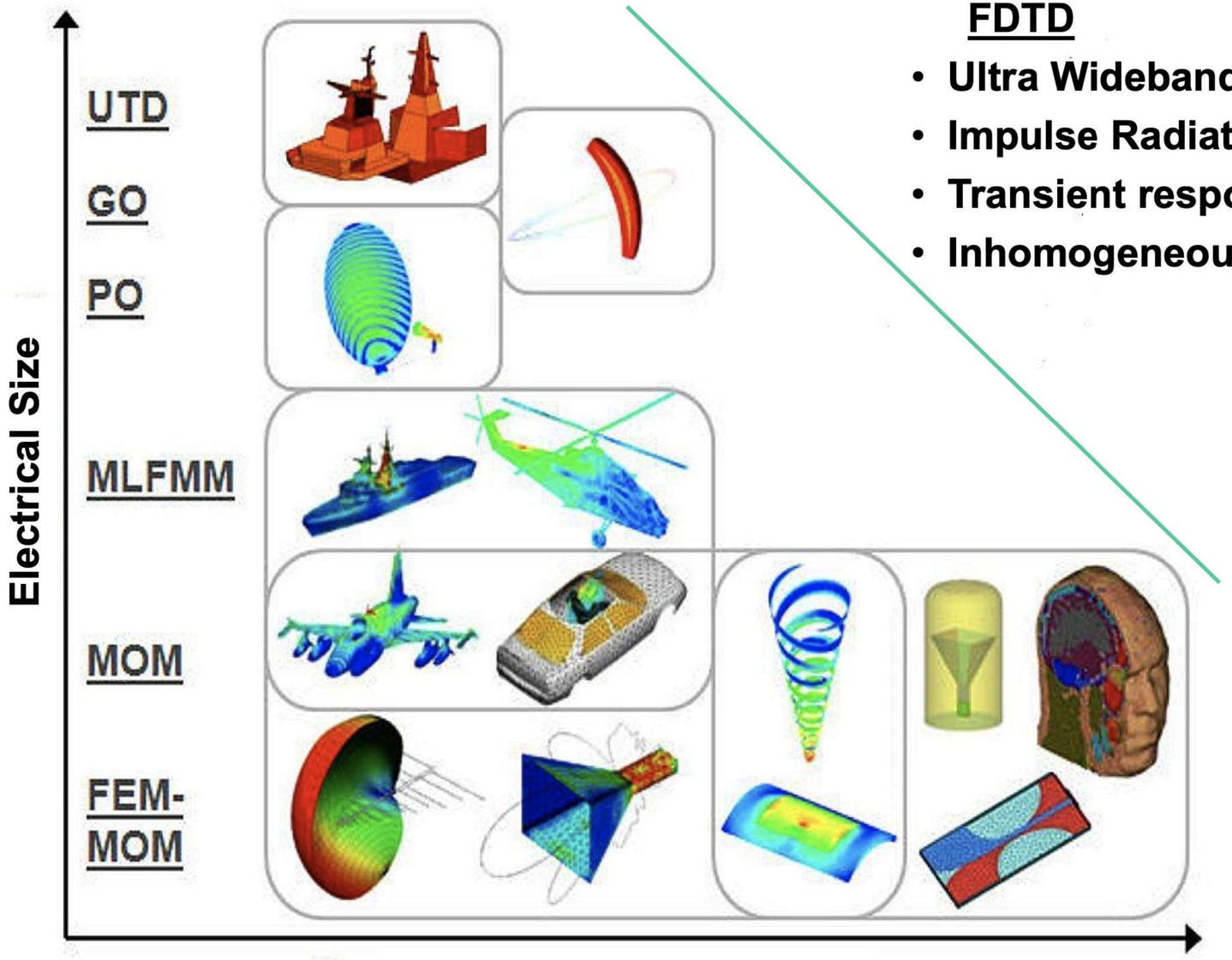

FDTD

- **Ultra Wideband antennas**
- **Impulse Radiating antennas**
- **Transient response**
- **Inhomogeneous materials**

Courtesy of EMSS

Maxwell's Equations

© Altair Engineering, Inc. Proprietary and Confidential. All rights reserved.

Analyzing Antennas

Solving Maxwell's Equations

- Electromagnetic field behavior is governed by Maxwell's equations
- Expressed in terms of fields (E, H) and sources (J, M)

$$\vec{\nabla} \times \vec{H} = \vec{J}_v + \varepsilon \frac{d\vec{E}}{dt}$$

$$\vec{\nabla} \times \vec{E} = -\vec{M}_v - \mu \frac{d\vec{H}}{dt}$$

$$\vec{\nabla} \bullet \vec{H} = \frac{1}{\mu} \sigma_m$$

$$\vec{\nabla} \bullet \vec{E} = \frac{1}{\varepsilon} \sigma_e$$

Solving for Electric Field in terms of Vector Potential **A** which is obtained using Free Space Green's Function, **G**

$$\mathbf{E} = -j\omega\mu\mathbf{A} + \frac{1}{j\omega\epsilon}\nabla(\nabla \cdot \mathbf{A})$$

$$\mathbf{E} = -j\omega\mu \int_V d\mathbf{r}' \mathbf{G}(\mathbf{r}, \mathbf{r}') \cdot \mathbf{J}(\mathbf{r}')$$

$$\mathbf{G}(\mathbf{r}, \mathbf{r}') = \frac{1}{4\pi}\left[\mathbf{I} + \frac{\nabla\nabla}{k^2}\right] G(\mathbf{r}, \mathbf{r}')$$

A = Vector Potential
G = Green's Function

Antenna Modeling Software

Program	Website	Notes
NEC-2	www.qsl.net/4nec2	Livermore Labs1970’s
EZNEC Pro/2+ v7.0	www.eznec.com	Roy Lewallen W7EL 1990’s
AutoEZ	www.ac6la.com/autoez.html	Automated shell for EZNEC
NEC v5.0	ipo.llnl.gov/technologies/nec	Requires a license-LLNL
MMANA-GAL MMANA-GAL PRO	http:gal-ana.de	Graphical User Interface MMANA-GAL Computation engine is MININEC v3 in C++

Why Model an Antenna?

- It’s difficult to calculate, assemble, raise, adjust and optimize a physical antenna.
- It’s difficult/time-consuming to measure the gain, radiation pattern, and efficiency of a real antenna.
- Antenna models can tell us much about efficiency, pattern, gain and input impedance.
- It’s FAST - We can iterate through a lot of models and quickly focus on those that are the most useful.
  - Properly done, it very accurate
  - Improperly done, it can generate nonsense

MMANA-GAL
Modeling Software

Original code by JE3HHT - Makoto Mori

MMANA-GAL basic & MMANA-GAL Pro
by
DL1PBD - Alex Schewelew & DL2KQ - Igor Gontcharenko

Multilingual MM Antenna Analyzer
(MS Windows)
"MMANA-GAL basic is still free for Amateur Radio Use"

What Happened to the MMAMA Program?
MMANA has a new name. and will now be called MMANA-GAL - GAL is an united abbreviation of names of DL1PBD and DL2KQ. This reflects substantial structure changes to the program. Besides regular improvements, new improvements create the possibility of further improvements of capabilities and services available with the program.

MMANA-GAL is an antenna-analyzing tool based on the moment method, which was introduced in MININEC. The

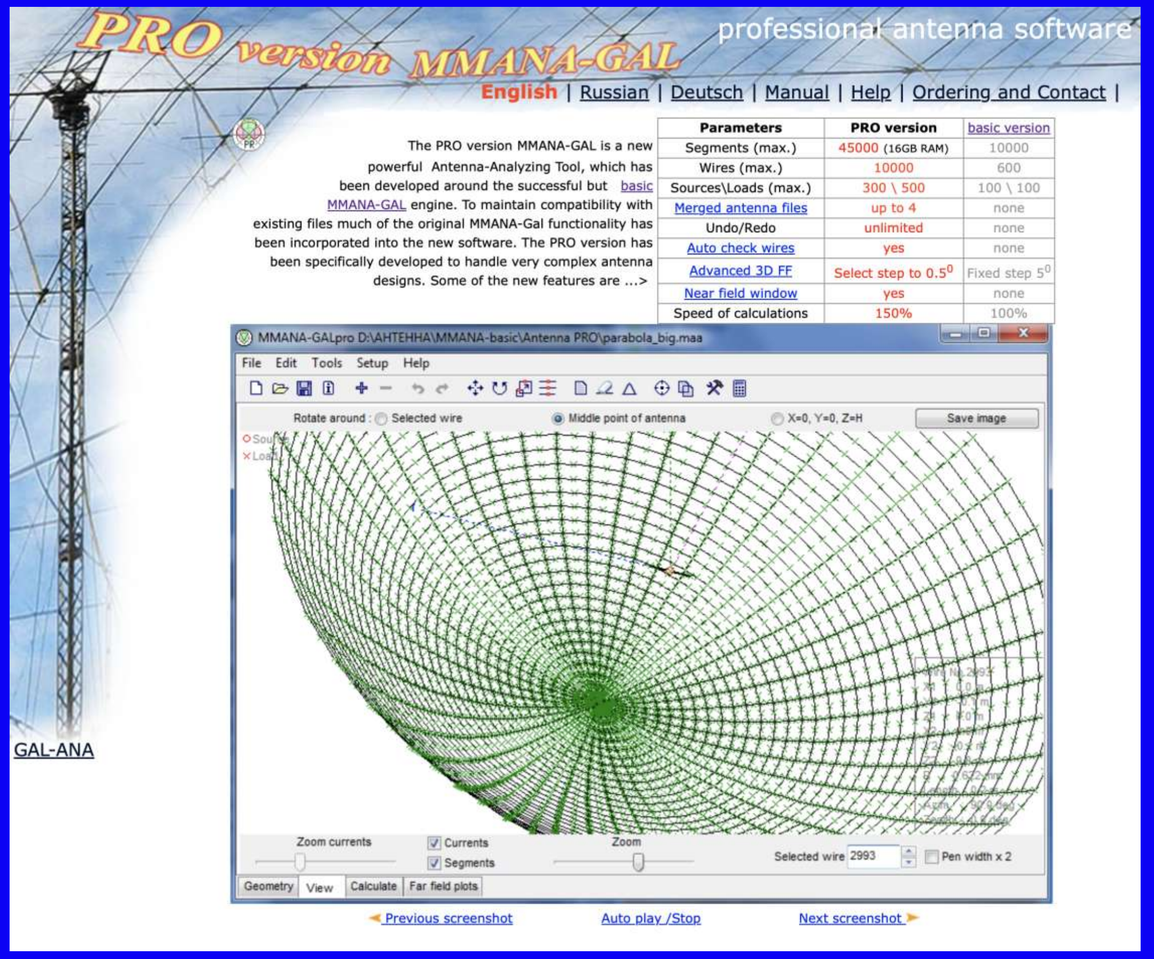

My Antennas

40M Horizontal Loop Antenna

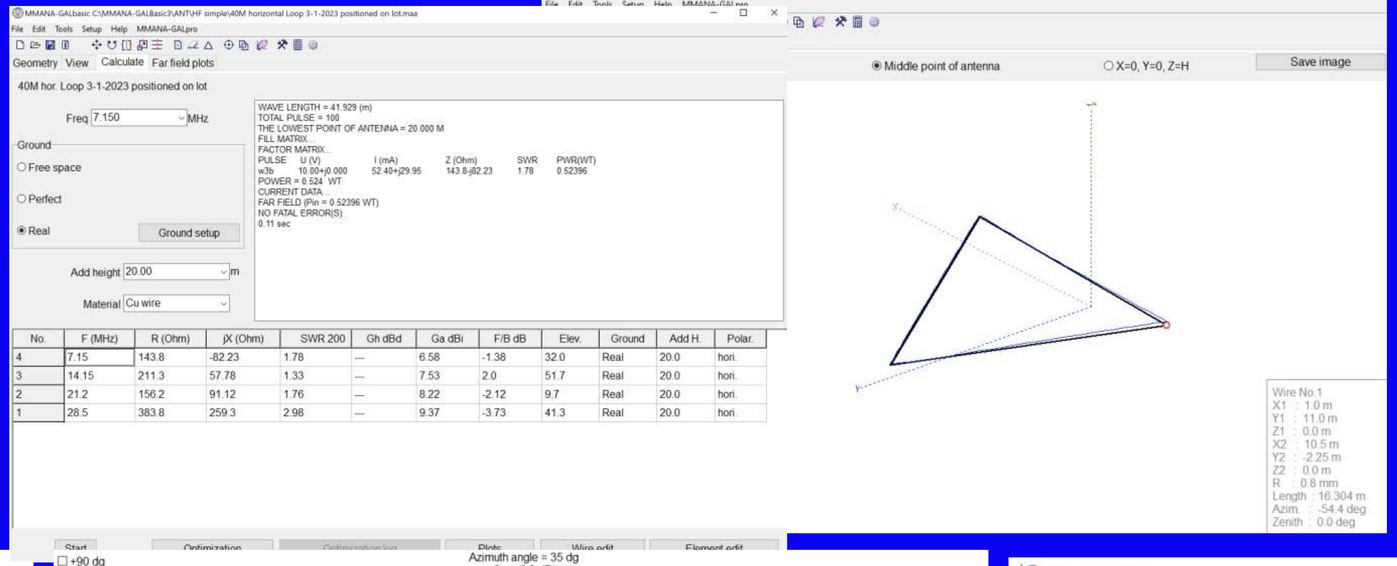

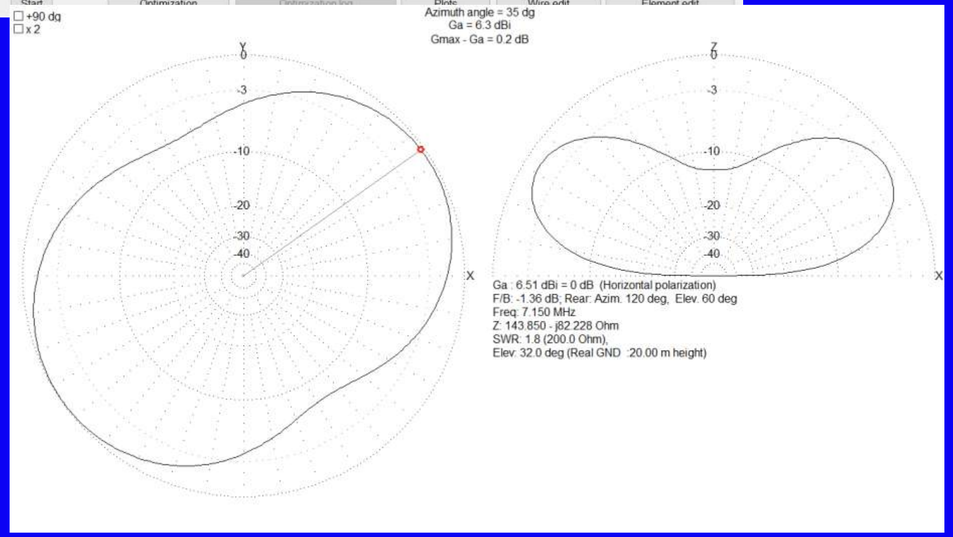

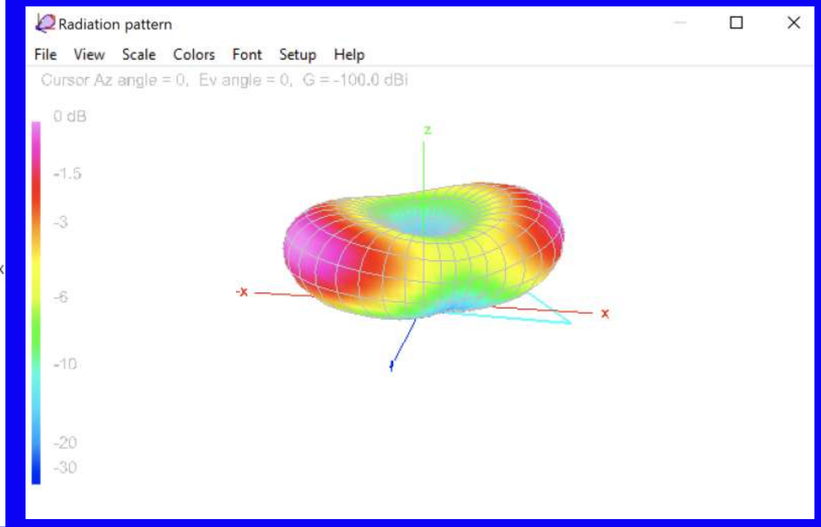

40M Horizontal Loop Antenna on 20M

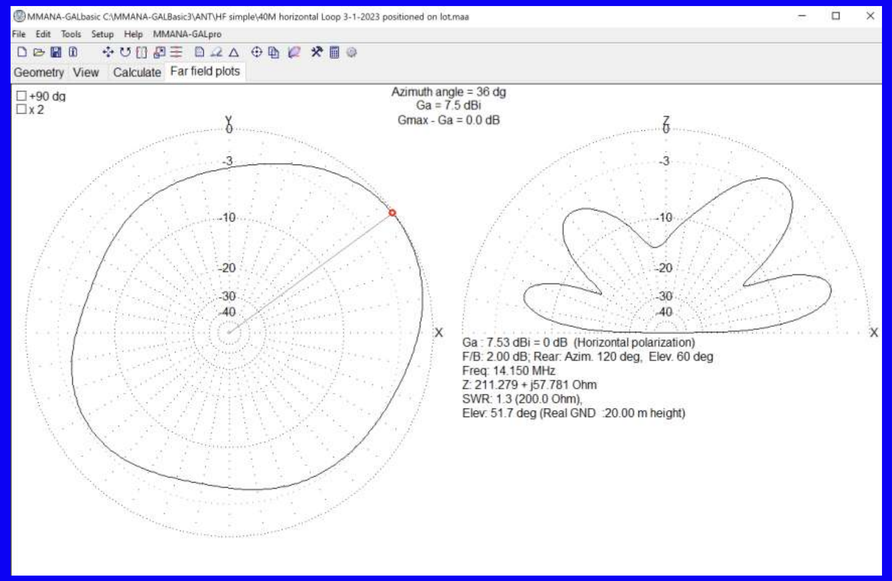

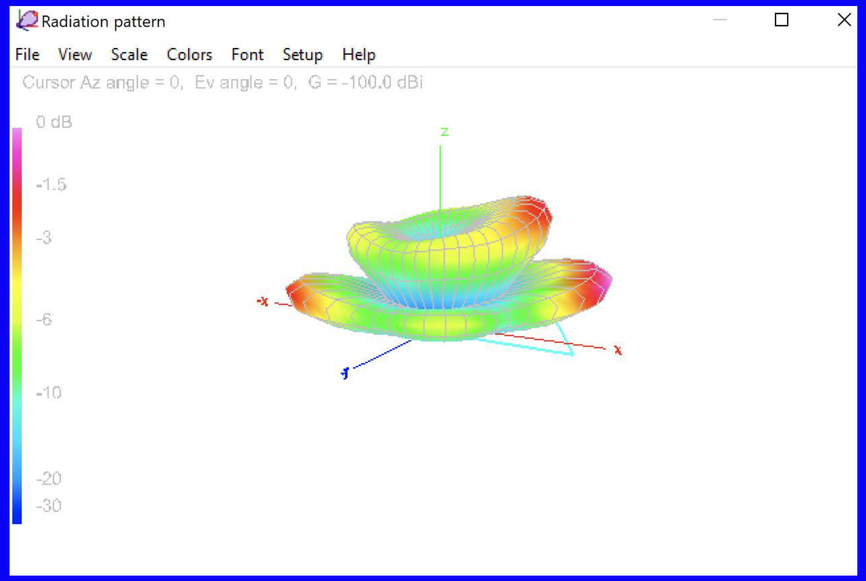

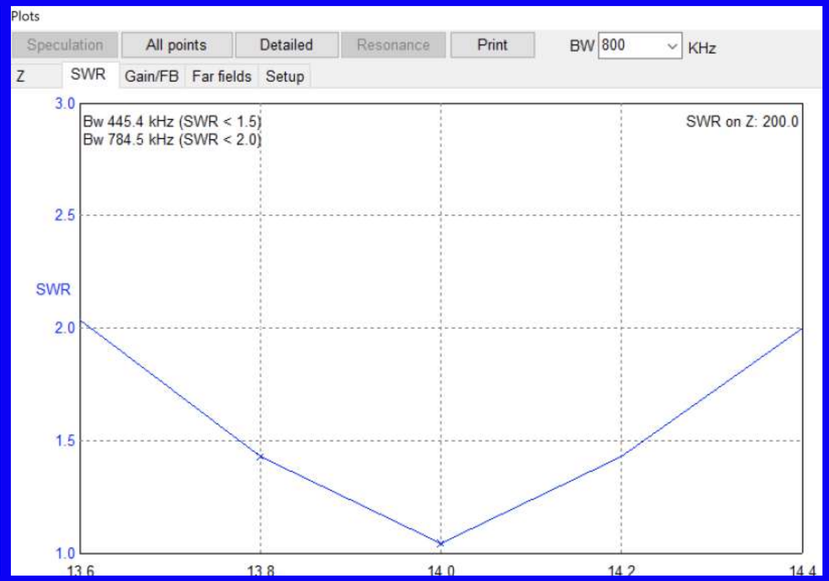

OCF Dipole Radiation Patterns

Horizontal

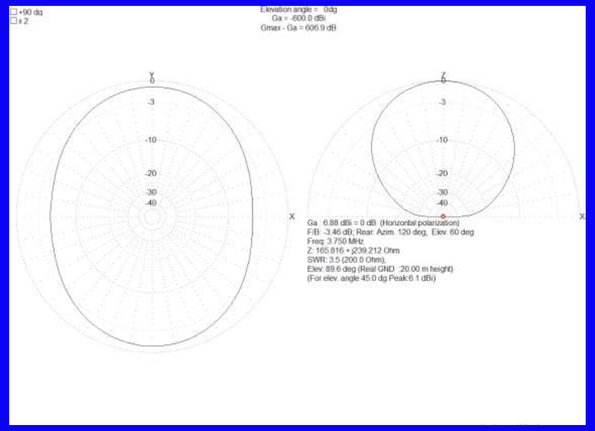

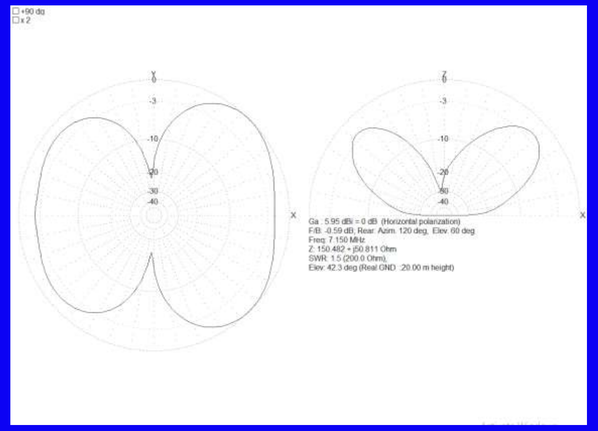

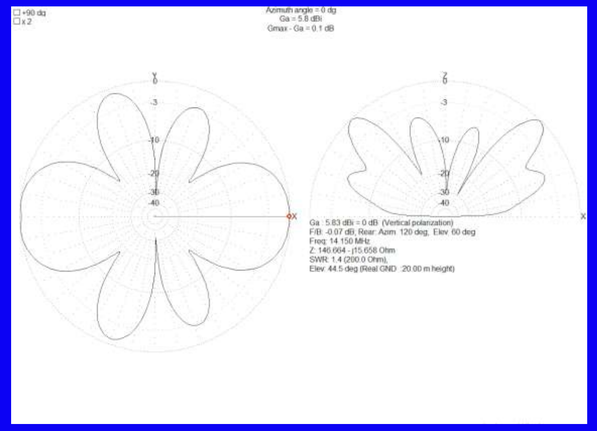

Horizontal
13’ end verticals

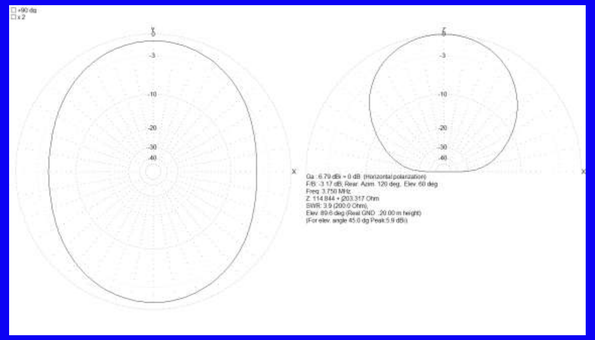

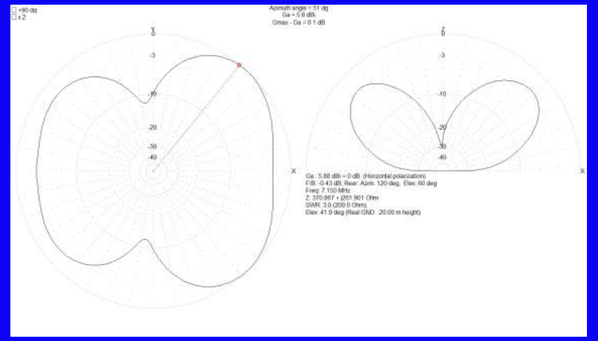

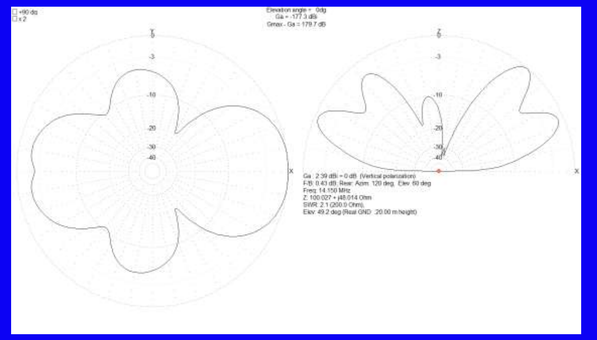

Horizontal
legs @135 degrees

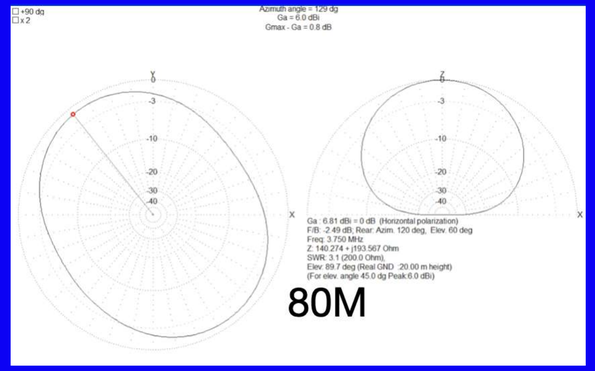

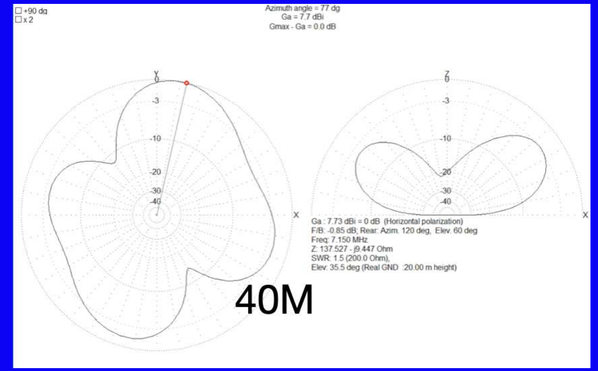

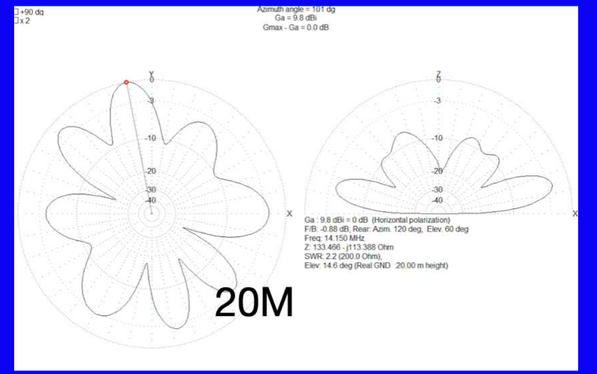

Propagation Pattern 40M EFHW

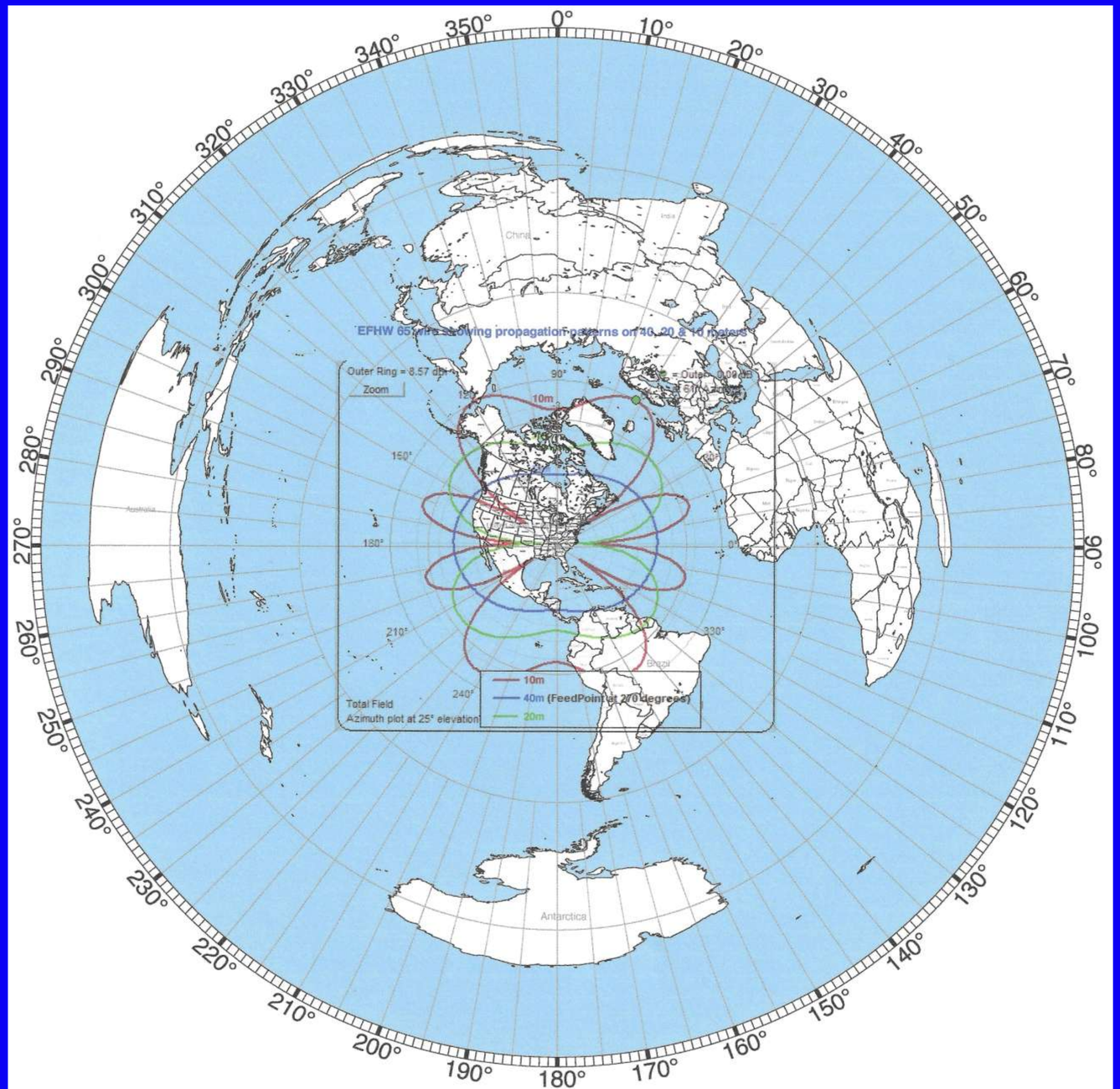

MMANA-GAL
What It Does

You describe the antenna to the program…..

- **Wire lengths, diameters, positions**
- **Source placement**
- **“Loads”, transformers, L networks**
- **Non-radiation transmission lines (incl. loss if desired)**
- **Ground**

The program tells you

- **Pattern: gain, front/back ratio**
- **Source impedances and SWR**
- **Load dissipation**
- **Currents**
- **Interaction with other antennas and conductors**
- **Antenna comparison**

Basic Procedure

- Geometry Tab
  - Name the antenna
  - Set a Designed-For Frequency

- Click the Wire Edit button to open the Wire Editor
  - Lay out the wires that make up the antenna
  - Be mindful of the axis

- Close the Wire Editor and go to the View Tab
  - Make sure it looks right
  - Add a feed point by right clicking the wire and choosing Add Source

- Go to the Calculate Tab
  - Set the Ground type (usually Real)
  - Set the Material and Height
  - Click the Start button to model the antenna

- Click the Plots button on the Calculate tab or switch to the Far Field Plots tab to view the characteristics of the antenna

MMANA-GALbasic

File Edit Tools Setup Help MMANA-GALpro

Geometry | View | Calculate | Far field plots

Rotate around : ○ Selected wire ◉ Middle point of antenna ○ X=0, Y=0, Z=H Save image

○Source
×Load

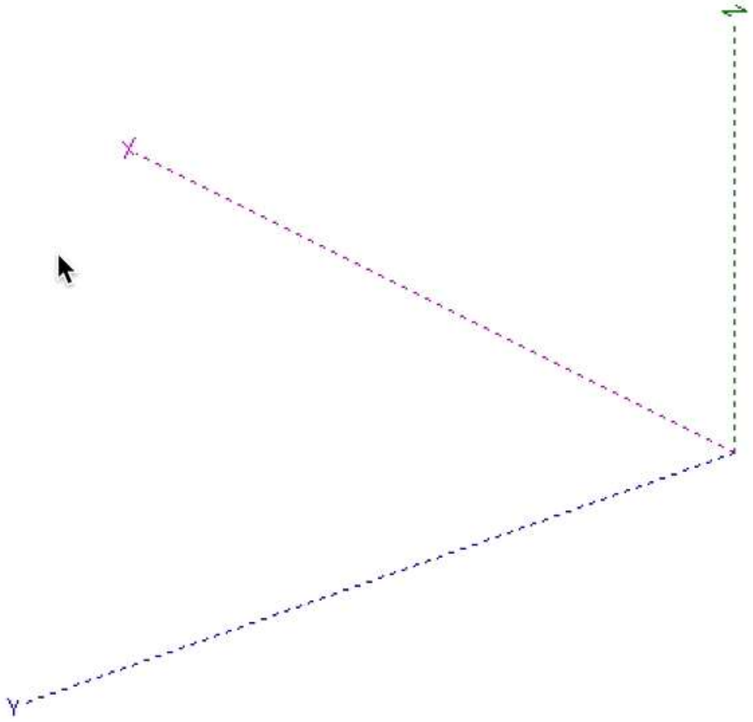

Zoom currents

☑ Currents
☐ Segments

Zoom

Selected wire 0 ☐ Pen width x 2

Activate Windows
Go to Settings to activate Windows.

Practice the Familiar

- Start with “known-good”models
- Familiar antennas (dipoles, verticals, loops)
- Study beam basics (Yagis & phased arrays)
- Reproduce validated results
- Small changes in design should result in small changes in performance
- Add small features to “known-good” models

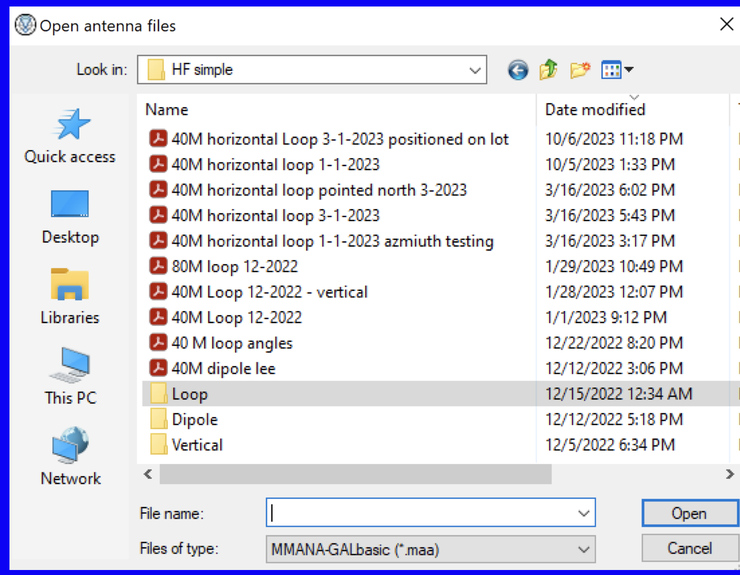

Where to get MMANA-GAL Basic

- MMANA-GAL Basic version is free only for private, Non-commercial use
- Official Website http://gal-ana.de
- To get the basic version go to http://gal-ana.de/basicmm/en/ and click on “Download”
- Select “Download MMANA-GAL basic version”

- User Group: https://groups.io/g/mmana-gal
- Tutorials available on YouTube @ DX Commander
  https://www.youtube.com/results?search_query=DX+Commander+MMANA-GAL
- Quickstart guide: http://gal-ana.de/basicmm/en/

MMANA YouTube videos
Callum, M0MCX - DX Commander

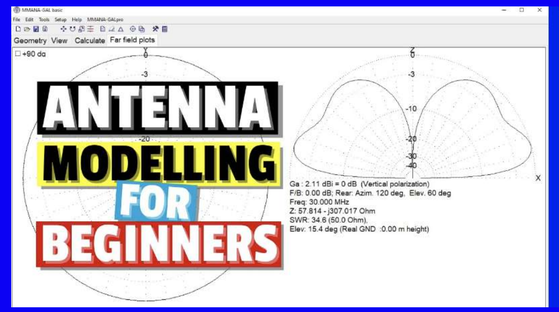

https://www.youtube.com/watch?v=dqBcYy6kwWs

https://youtube.com/watch?v=iMBQiFAvcRo

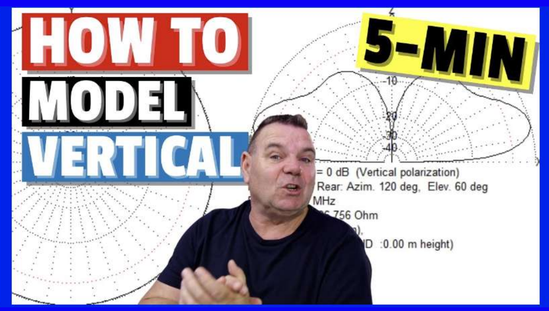

https://youtube.com/watch?v=Dxedmw0dfjg

https://www.youtube.com/watch?v=AbKqqBmeacQ

The Prime Directive

"Essentially, all models are wrong, but some are useful"

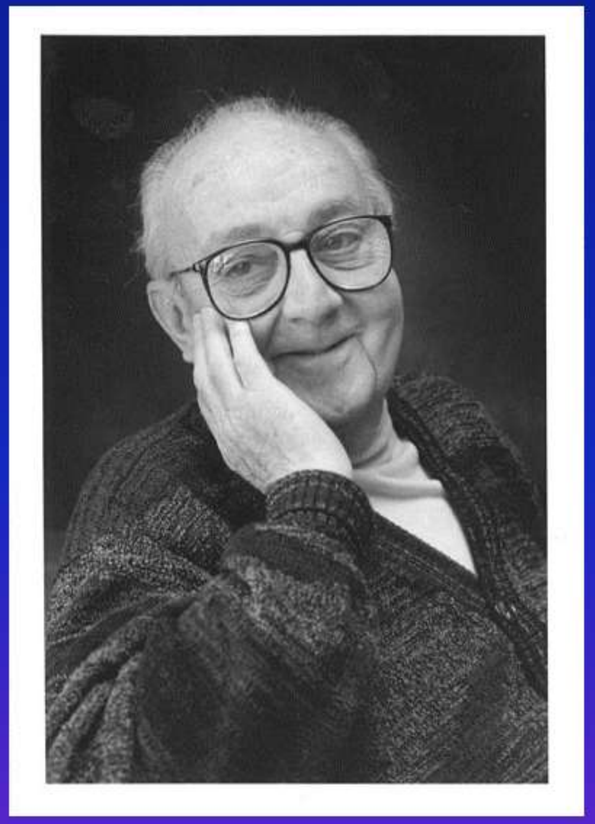

George Edward Pelham Box
British Mathematician
1919 - 2013

"Since all models are wrong the scientist cannot obtain a "correct" one by excessive elaboration. On the contrary following William of Occam he should seek an economical description of natural phenomena. Just as the ability to devise simple but evocative models is the signature of the great scientist, so overelaboration and over-parameterization is often the mark of mediocrity."

Computer Models Correct?

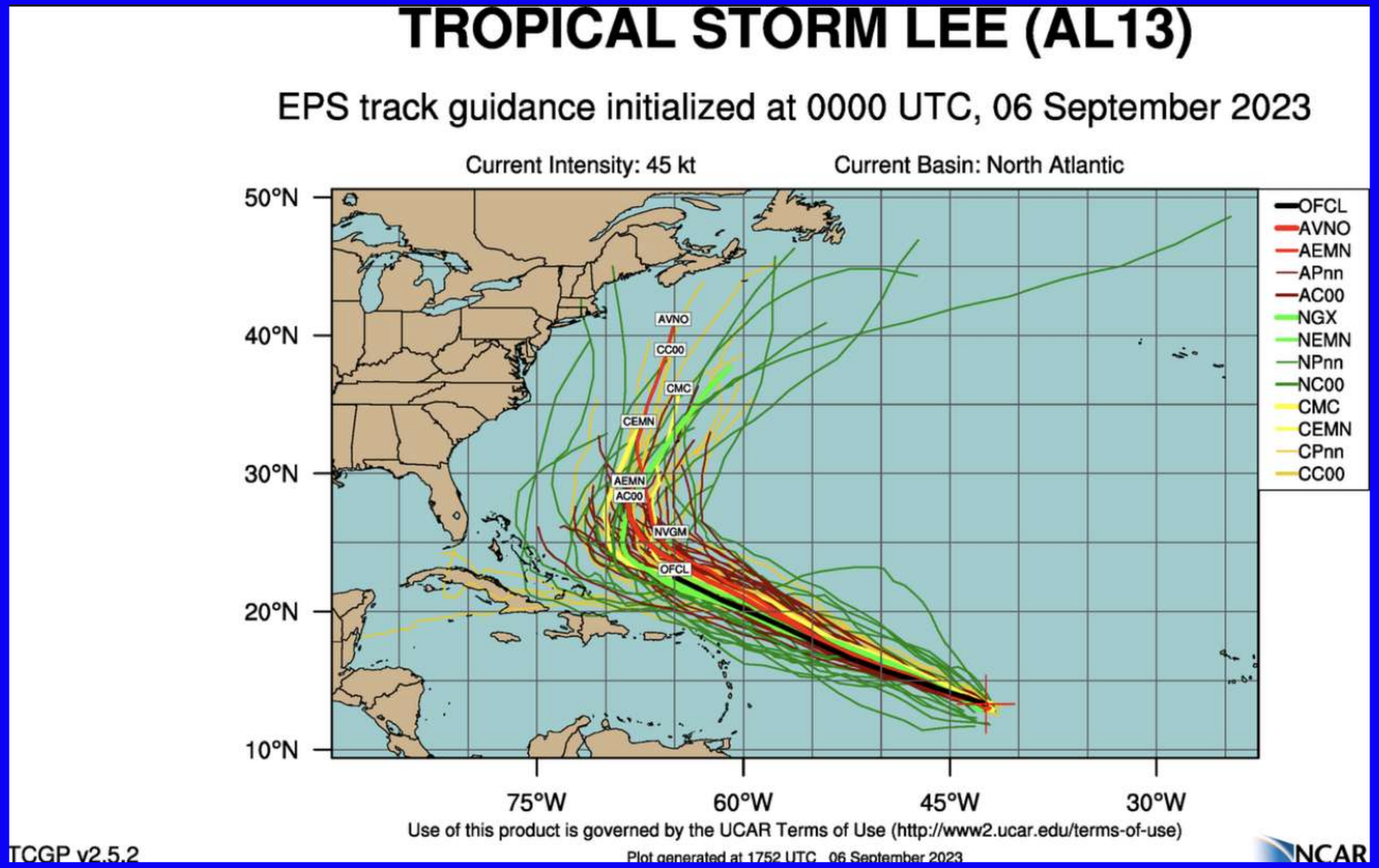

Q & A

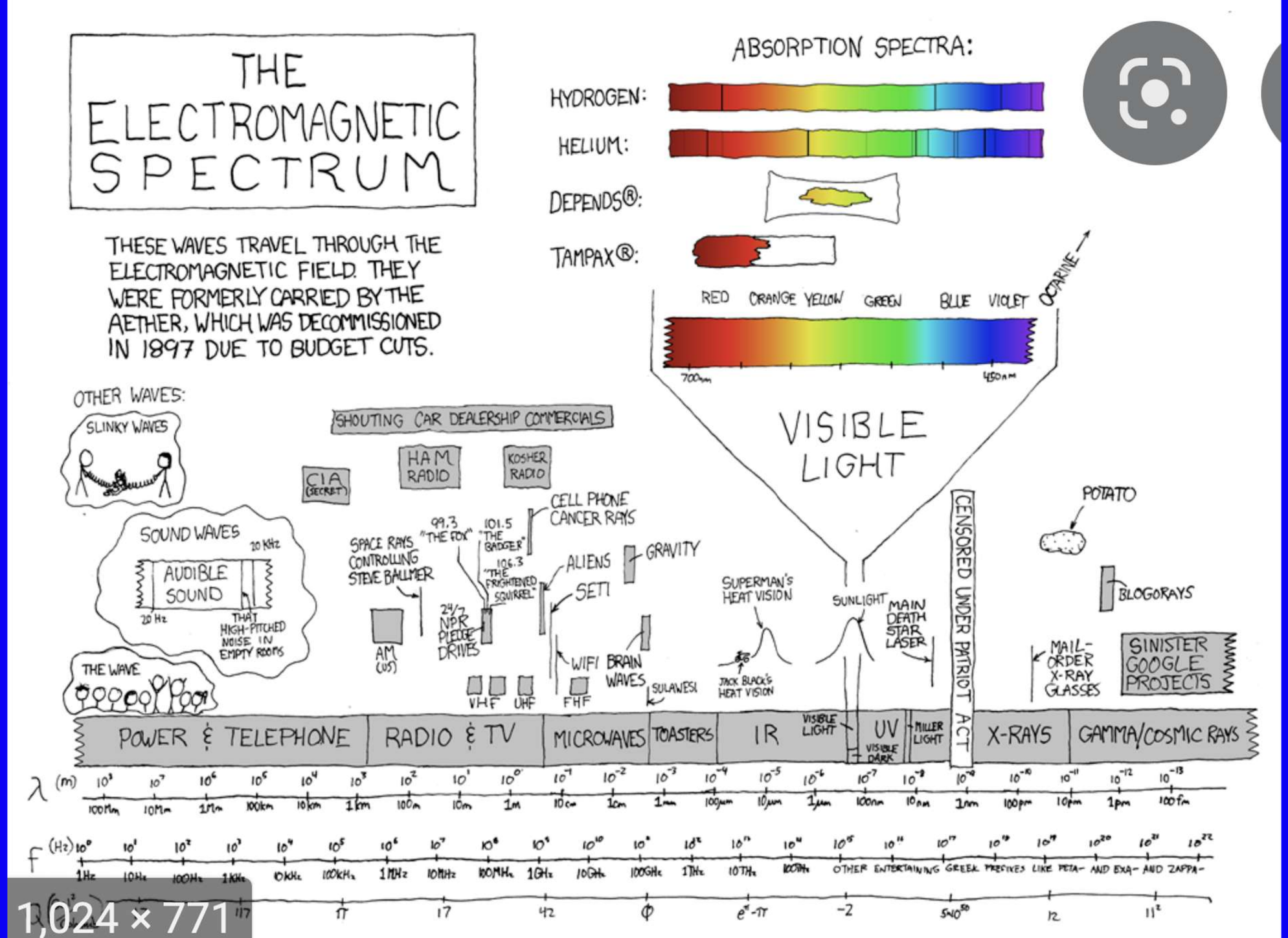
THE ELECTROMAGNETIC SPECTRUM
THESE WAVES TRAVEL THROUGH THE ELECTROMAGNETIC FIELD. THEY WERE FORMERLY CARRIED BY THE AETHER, WHICH WAS DECOMMISSIONED IN 1897 DUE TO BUDGET CUTS.
ABSORPTION SPECTRA:
HYDROGEN:
HELIUM:
DEPENDS®:
TAMPAX®:
RED ORANGE YELLOW GREEN BLUE VIOLET OCTARINE
700nm
450nm
VISIBLE LIGHT
OTHER WAVES:
SLINKY WAVES
SOUND WAVES
20 KHz
AUDIBLE SOUND
20 Hz
THAT HIGH-PITCHED NOISE IN EMPTY ROOMS
THE WAVE
SHOUTING CAR DEALERSHIP COMMERCIALS
CIA (SECRET)
HAM RADIO
KOSHER RADIO
CELL PHONE CANCER RAYS
SPACE RAYS CONTROLLING STEVE BALLMER
99.3 "THE FOX"
101.5 "THE BADGER"
106.3 "THE FRIGHTENED SQUIRREL"
ALIENS
GRAVITY
SETI
24/7 NPR PLEDGE DRIVES
AM (US)
WIFI
BRAIN WAVES
SULAWESI
VHF UHF FHF
SUPERMAN'S HEAT VISION
JACK BLACK'S HEAT VISION
SUNLIGHT
MAIN DEATH STAR LASER
CENSORED UNDER PATRIOT ACT
POTATO
BLOGORAYS
MAIL-ORDER X-RAY GLASSES
SINISTER GOOGLE PROJECTS
POWER & TELEPHONE
RADIO & TV
MICROWAVES
TOASTERS
IR
VISIBLE LIGHT
UV
VISIBLE DARK
MILLER LIGHT
X-RAYS
GAMMA/COSMIC RAYS
λ (m)
100Mm 10Mm 1Mm 100km 10km 1km 100m 10m 1m 10cm 1cm 1mm 100μm 10μm 1μm 100nm 10nm 1nm 100pm 10pm 1pm 100fm
f (Hz)
1Hz 10Hz 100Hz 1KHz 10KHz 100KHz 1MHz 10MHz 100MHz 1GHz 10GHz 100GHz 1THz 10THz 100THz
OTHER ENTERTAINING GREEK PREFIXES LIKE PETA- AND EXA- AND ZAPPA-
117 π 17 42 φ e^π-π -2 5×10^50 12 11^2

1,024 × 771